ECO NO.	DATE	REV.	REVISION RECORD	AUTH.	DR. BY
5178	7/17/92	A	ADDED POLARITY SYMBOLS TO SCHEMATIC		TSM
5291	5/17/93	B	WIRE #12 BLU WAS #12 GREEN		TSM
5398	10/4/93	C	CONTROLLER VIO/WHT(+) was VIO(+)		HJN
5606	9-12-03	D	REMOVED BATTERY CHARGER FROM 20A BREAKER; ADDED LINE FROM BATTERY CHARGER TO STARTER B+; ADDED 30A FUSE TO BATTERY CHARGER.		WRM
5611	9-14-03	E	ADDED NOTE FOR 50Hz OVERSPEED BOARD		GA
5976	3-15-2005	F	1500 RPM WAS 1200RPM		GA

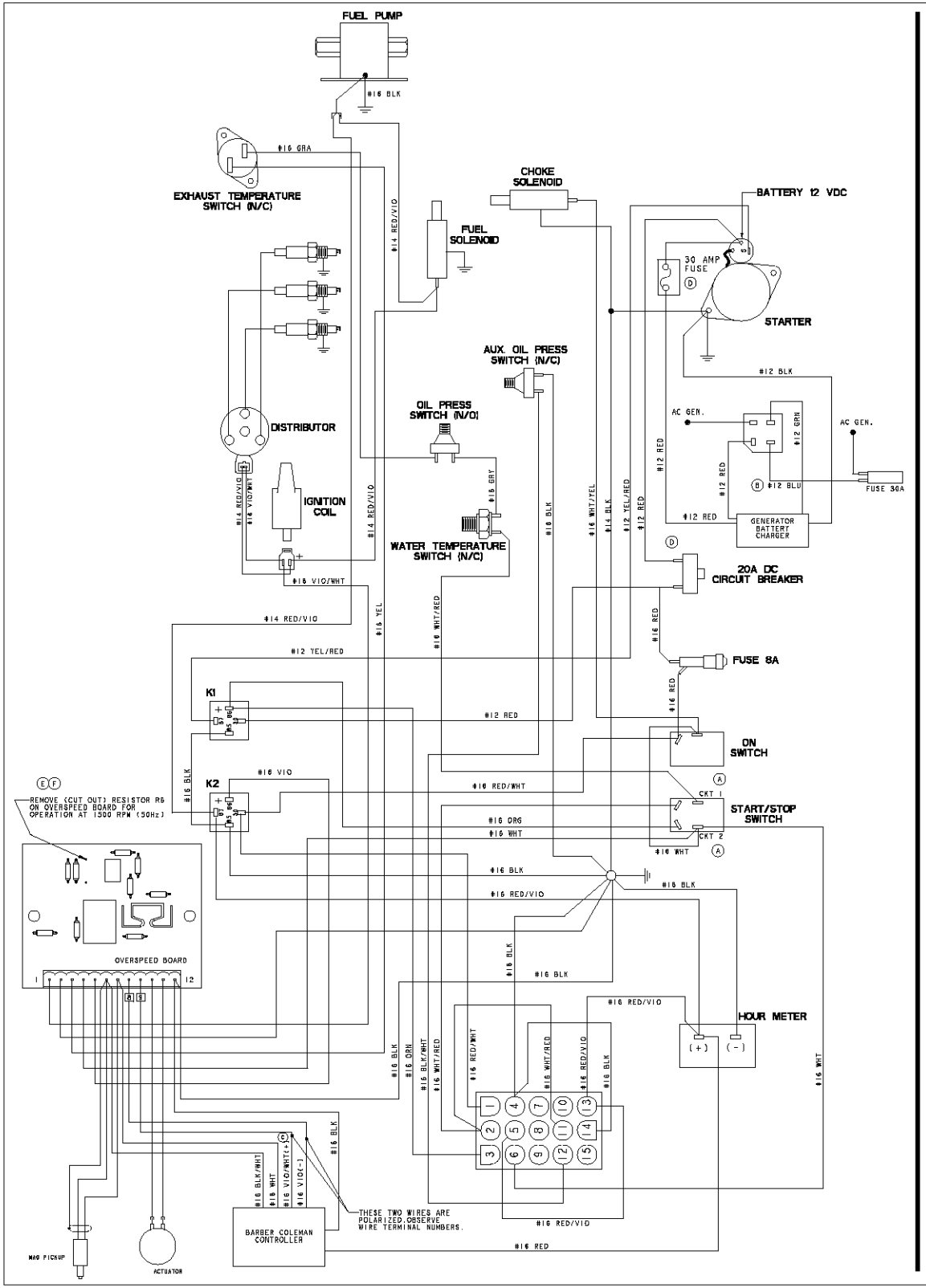

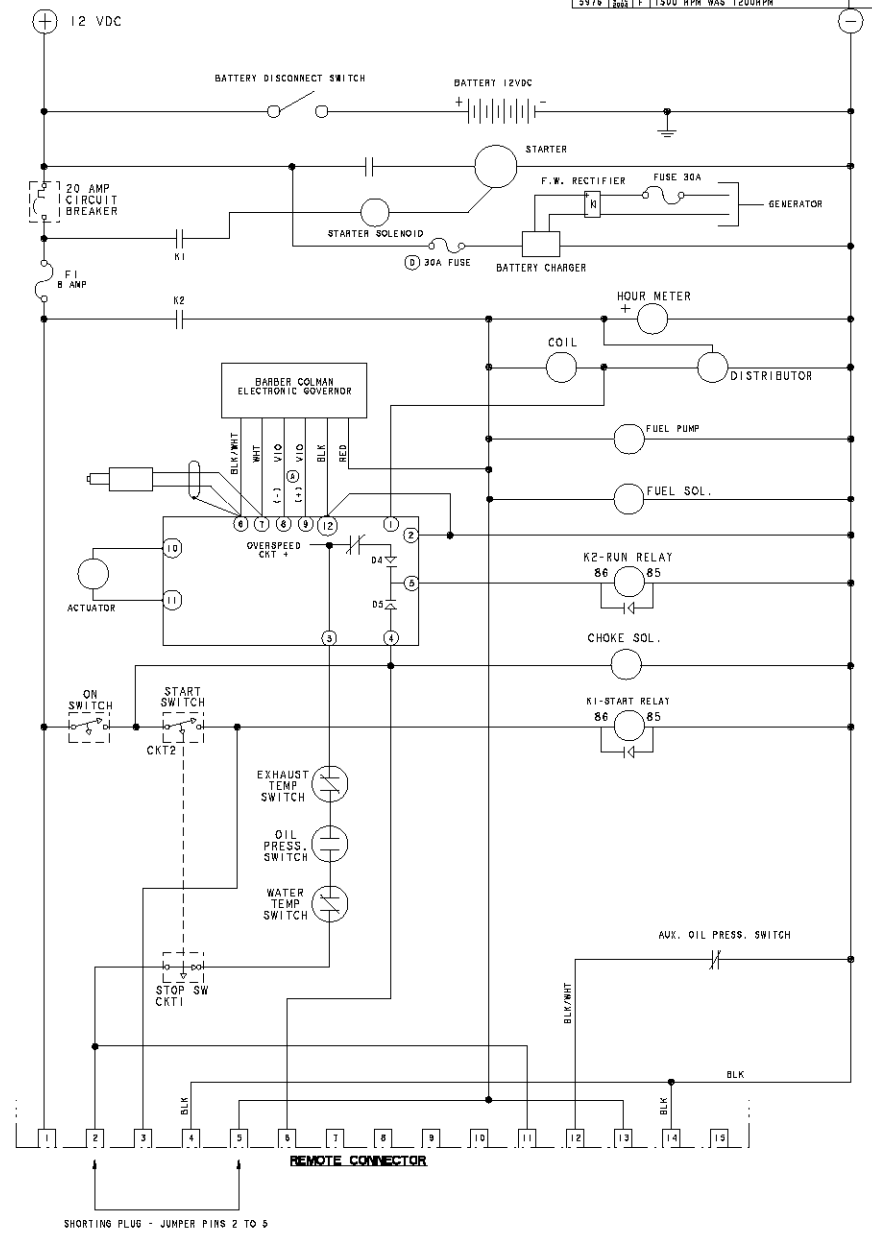

NOTES:
1. ALL WIRE #16AWG(105DEG C 600V-ALPHA# 1858/19-MIL-W-16878D TYPE B) UNLESS SPECIFIED OTHERWISE.
2. WARNING - RELAYS K1, K2 HAVE INTERNAL DIODES ACROSS THEIR COILS. POLARITY AS INDICATED MUST BE MAINTAINED TO AVOID DAMAGE TO THE RELAYS.

TOLERANCES (UNLESS OTHERWISE NOTED)	WESTERBEKE CORPORATION TAUNTON MA. 02780		
INCHES: XX ±.02, XXX ±.005, XXXX ±.0005, ANGLES ±2°, FINISH 63	MILLIMETERS: X ±.5, XX ±.25	TITLE: WIRING DIAGRAM 5.0 - 7.0 BCG	
		DRAWN BY: JBD	DATE: 16/Mar/01
DIMENSIONS: INCHES / MILLIMETERS		APPROVED BY:	DATE:
		SCALE: NONE	SIZE: E
		SHT. 1 of 1	DRAWING NUMBER: 46876
			REV: F